Yalelift 360 hand chain hoist

Product information



General:
Capacity 500 - 20000 kg
Areas of operation as well as operator conditions have been improved far beyond those of a classical hand chain hoist.

Features:
· The enclosed robust stamped steel housing protects all internal components even in the toughest conditions.
· The extremely low headroom allows maximum use of the lifting height.
· The revolutionary 360° rotating hand chain guide allows the operator to work from virtually any position, in confined spaces or above the load. The Yalelift can even be operated from the side of the load which also makes it possible to use the hoist for horizontal pulling or tensioning. Due to the additional flexibility, the operator is no longer forced to work in the danger zone near the load.
· The brake system is extremely quiet and guarantees operational safety and improved serviceability due to omission of the vulnerable ratchet pawls. All parts are made of high quality materials, additionally zinc-plated or yellow-chromated to increase corrosion prevention.
· Chain guide and gearbox are almost totally enclosed. Even under the toughest conditions the internal gear-box remains protected.
· The hardened load sheave with four precision machined pockets ensures accurate movement of the load chain.
· The surface protected zinc-plated alloy steel load chains fulfil all requirements of current national and international standards and regulations.
· Drop forged load and suspension hooks that yield under overload instead of breaking, are made of high tensile steel. The hooks are fitted with robust safety latches and rotate 360°.

Options
· Adjustable overload protection device

... *Read more*

Note: Yale hoists and trolleys are not designed for passenger elevation applications and must not be used for this purpose.

© November 2026 - All Rights Reserved

Yalelift 360 hand chain hoist

Blueprint

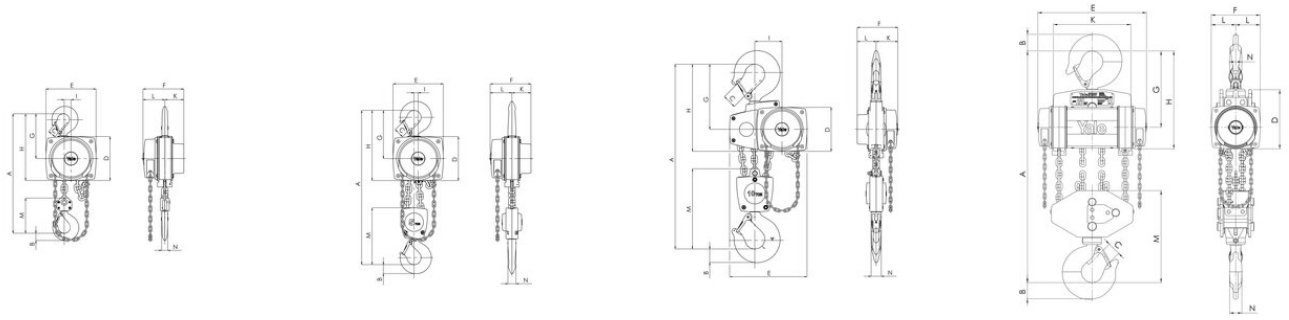

Technical data

Part code	WLL kg	Lifting height m	Number of falls	Model	Load chain mm	Lift per 1mhand chainoverhaul mm	Handle pullat WLL daN	Weight kg
500550000300150	500	3	1	YL 500	5 x 15	33	21	9
500550001200150	500	12	1	YL 500	5 x 15	33	21	-
500550001500150	500	15	1	YL 500	5 x 15	33	21	-
5005100000300150	1,000	3	1	YL 1000	6 x 18	20	30	13
500510000600150	1,000	6	1	YL 1000	6 x 18	20	30	-
500510000900150	1,000	9	1	YL 1000	6 x 18	20	30	-
500510001200150	1,000	12	1	YL 1000	6 x 18	20	30	-
500510001500150	1,000	15	1	YL 1000	6 x 18	20	30	-
5005200000300150	2,000	3	1	YL 2000	8 x 24	14	32	20
500520000600150	2,000	6	1	YL 2000	8 x 24	14	32	-
500520000900150	2,000	9	1	YL 2000	8 x 24	14	32	-
500520001200150	2,000	12	1	YL 2000	8 x 24	14	32	-
500520001500150	2,000	15	1	YL 2000	8 x 24	14	32	-
5005300000300150	3,000	3	1	YL 3000	10 x 30	12	38	29
500530000600150	3,000	6	1	YL 3000	10 x 30	12	38	-
500530000900150	3,000	9	1	YL 3000	10 x 30	12	38	-
500530001200150	3,000	12	1	YL 3000	10 x 30	12	38	-
500530001500150	3,000	15	1	YL 3000	10 x 30	12	38	-
5005500000300150	5,000	3	2	YL 5000	10 x 30	6	34	38
500550000600150	5,000	6	2	YL 5000	10 x 30	6	34	-
500550000900150	5,000	9	2	YL 5000	10 x 30	6	34	-
500550001200150	5,000	12	2	YL 5000	10 x 30	6	34	-

© November 2026 - All Rights Reserved

Yalelift 360 hand chain hoist

Technical data

Part code	WLL kg	Lifting height m	Number of falls	Model	Load chain mm	Lift per 1mhand chainoverhaul mm	Handle pullat WLL daN	Weight kg
500550001500150	5,000	15	2	YL 5000	10 x 30	6	34	-
50051000000300150	10,000	3	3	YL 10000	10 x 30	4	44	71
500510000600150	10,000	6	3	YL 10000	10 x 30	4	44	-
500510000900150	10,000	9	3	YL 10000	10 x 30	4	44	-
500510001200150	10,000	12	3	YL 10000	10 x 30	4	44	-
500510001500150	10,000	15	3	YL 10000	10 x 30	4	44	-
50052000000300150	20,000	3	6	YL 20000	10 x 30	2	2 x 44	196
500520000600150	20,000	6	6	YL 20000	10 x 30	2	2 x 44	-
500520000900150	20,000	9	6	YL 20000	10 x 30	2	2 x 44	-
500520001200150	20,000	12	6	YL 20000	10 x 30	2	2 x 44	-
500520001500150	20,000	15	6	YL 20000	10 x 30	2	2 x 44	-

© November 2026 - All Rights Reserved